3. Schemat elektryczny sterowania

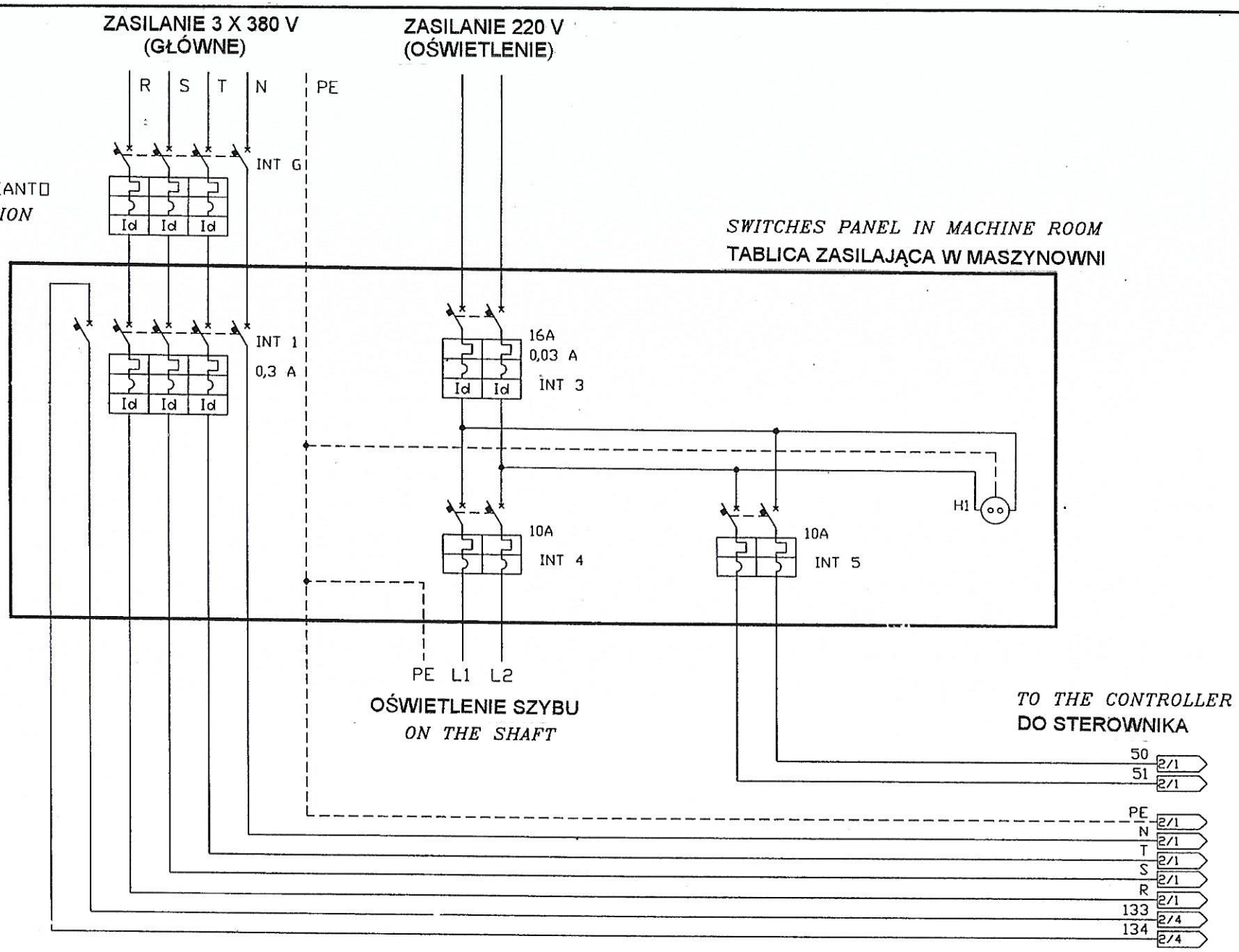

1	2	3	4	5	6	7	8	9	10	11	12	13	14	15	16

Daldoss Elevetronic

DOCUMENT NUMBER HO.1.IM8.03

REV. 1

CIRCUIT DIAGRAM EASYLIFE 3~ GMV FERMATOR VVF

CORY 200 SCHEMAT GŁÓWNY ZASILANIA

DRAWN BY

CHECK

DATE 01/09/00

N. MANOEUVRE

REPLACING DWG REV.

SHEET 1 OF 11

RESERVED PROPERTY REPRODUCTION EVEN PARTIAL IS NOT ALLOWED

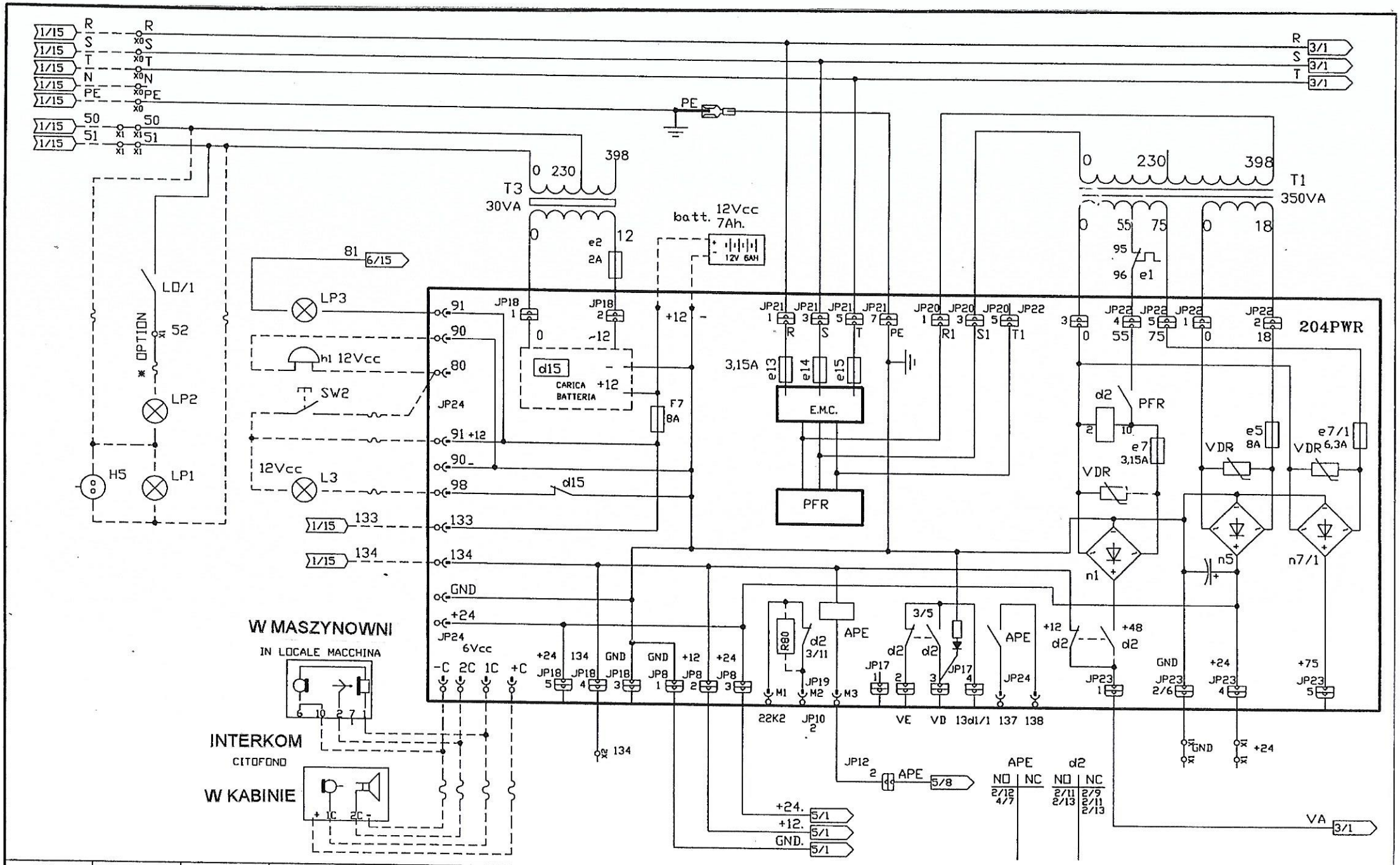

1	2	3	4	5	6	7	8	9	10	11	12	13	14	15	16

Daldoss Elevetronic

DOCUMENT NUMBER: H0.1.IM8.03
REV. 1

CIRCUIT DIAGRAM: EASYLIFE 3~ GMV FERMATOR VVF

CORY 200

DRAWN BY: Bob A.
CHECK:

DATE: 01/09/00
REPLACING DWG REV.
SHEET 2 OF 11

N. MANOEUVRE

RESERVED PROPERTY REPRODUCTION EVEN PARTIAL IS NOT ALLOWED

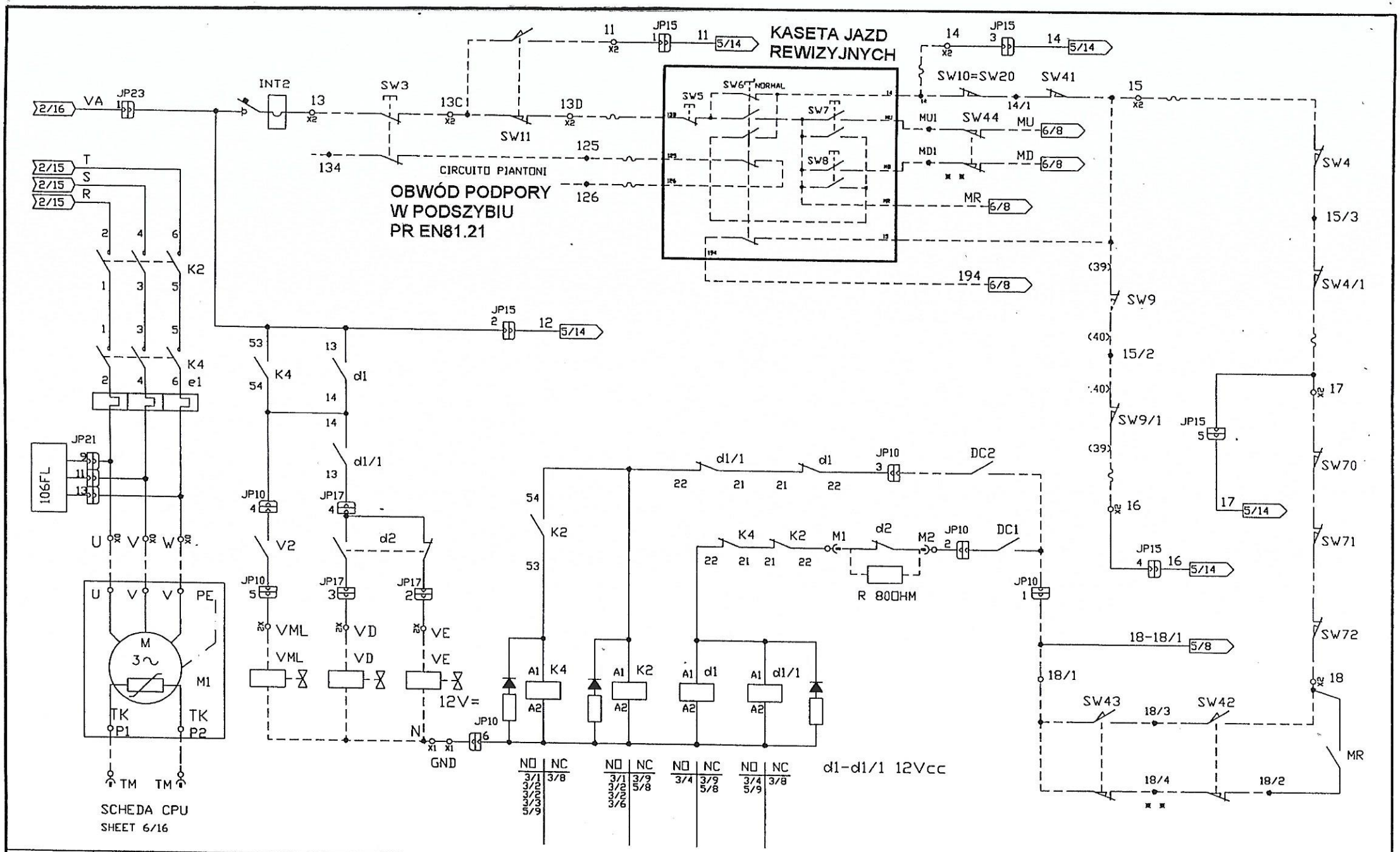

1	2	3	4	5	6	7	8	9	10	11	12	13	14	15	16

Daldoss Elevetronic

DOCUMENT NUMBER: H0.1.IM8.03
REV. 1

CIRCUIT DIAGRAM: EASYLIFE 3~ GMV FERMATOR VVF
CORY 200

DRAWN BY: B.G.L. A.
CHECK: Ali Reza

DATE: 01/09/00
REPLACING DWG REV.
N. MANOEUVRE

SHEET 3 OF 11

RESERVED PROPERTY REPRODUCTION EVEN PARTIAL IS NOT ALLOWED

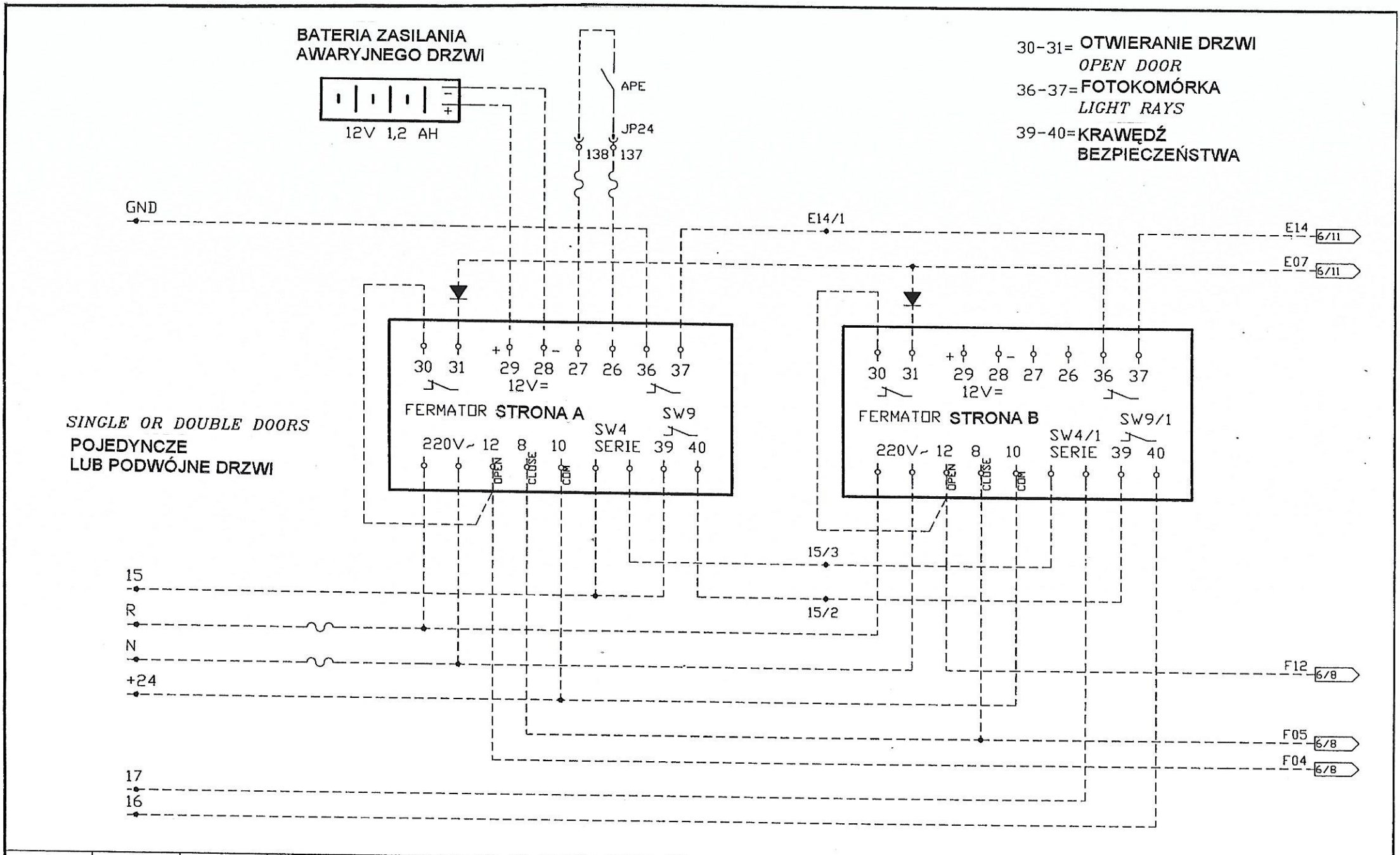

1	2	3	4	5	6	7	8	9	10	11	12	13	14	15	16
Daldoss Elevetronic				DOCUMENT NUMBER HO.1.IM8.03 REV. 1	CIRCUIT DIAGRAM EASYLIFE 3~ GMV FERMATOR VVF CORY 200					DRAWN BY		DATE 01/09/00		REPLACING DWG REV.	SHEET 4
										CHECK		N. MANOEUVRE			OF 11

RESERVED PROPERTY REPRODUCTION EVEN PARTIAL IS NOT ALLOWED

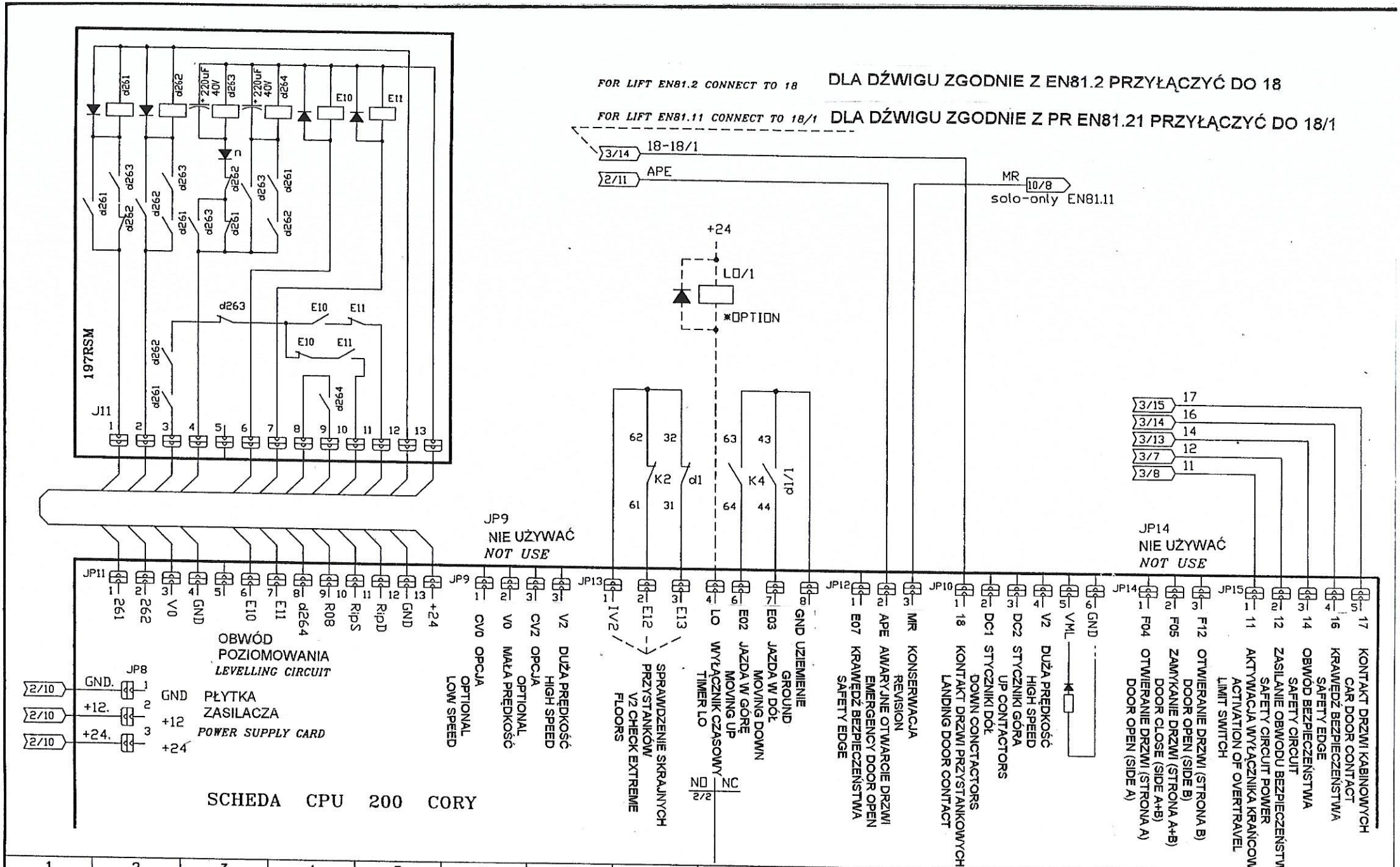

1	2	3	4	5	6	7	8	9	10	11	12	13	14	16

Daldoss Elevetronic

DOCUMENT NUMBER HO.1.IM8.03 REV. 1

CIRCUIT DIAGRAM EASYLIFE 3~ GMV FERMATOR VVF

CORY 200

DRAWN BY

CHECK

DATE 01/09/00

N. MANOEUVPE

REPLACING DWG REV.

SHEET 5 OF 11

RESERVED PROPERTY REPRODUCTION EVEN PARTIAL IS NOT ALLOWED

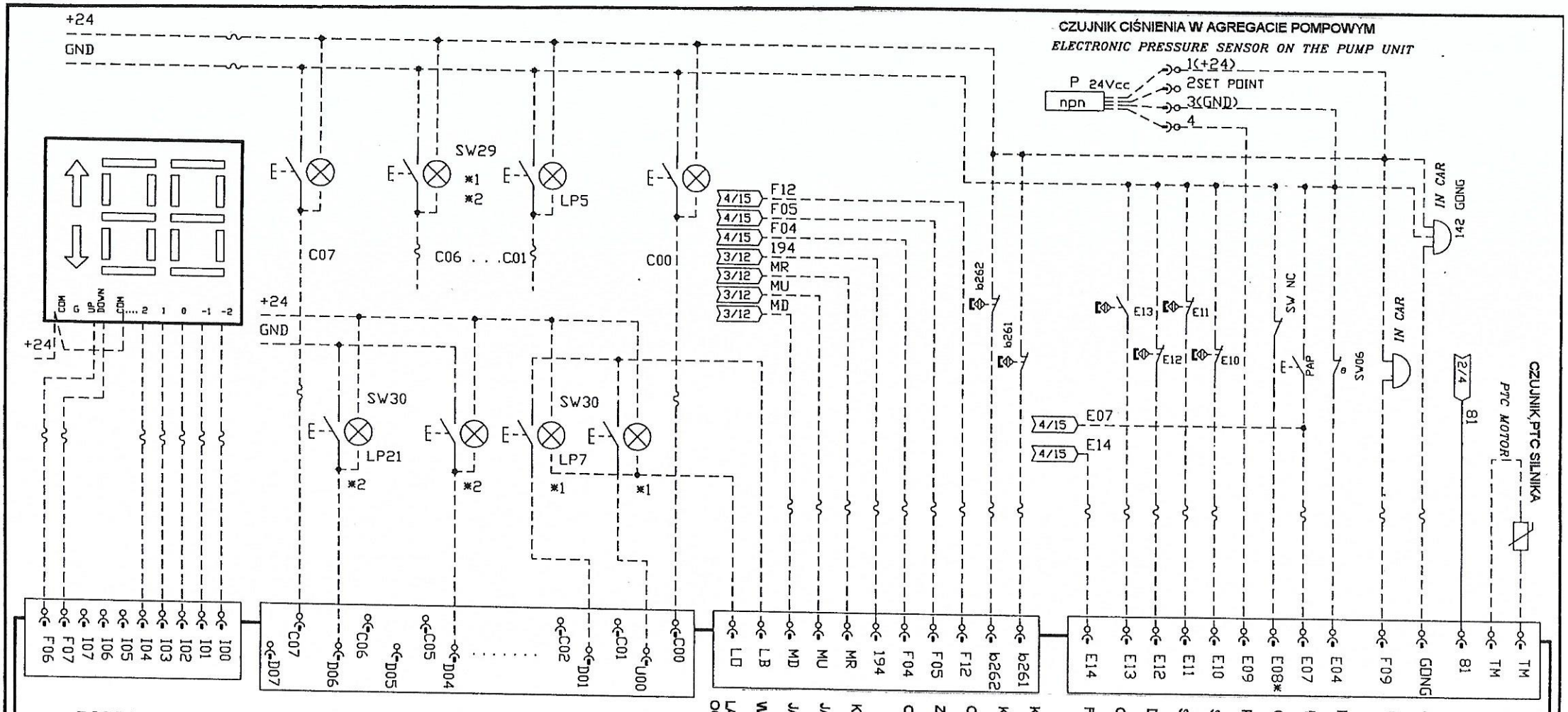

1	2	3	4	5	6	7	8	9	10	11	12	13	14	15	16
Daldoss Elevetronic				DOCUMENT NUMBER HO.1.IM8.03 REV. 1	CIRCUIT DIAGRAM EASYLIFE 3~ GMV FERMATOR VVF CORY 200					DRAWN BY		DATE 01/09/00		REPLACING DWG REV.	SHEET 6
										CHECK		N. MANOEUVRE			OF 11

RESERVED PROPERTY REPRODUCTION EVEN PARTIAL IS NOT ALLOWED

X= DYSTANS ZADZIAŁANIA
ZALEŻY OD PRĘDKOŚCI KABINY

X= BRAKING DISTANCE
IT DEPENDS ON THE CAR SPEED.

KONTAKTRONY MIP2 SĄ MONTOWANE
PRZEWODAMI DO GÓRY

THE MIP2 ARE MOUNTED
WITH WIRES TO THE TOP

●= PÓŁNOC

O= POŁUDNIE

CONTATTO CHIUSO — KONTAKT ZAMKNIĘTY

CONTATTO APERTO — KONTAKT OTWARTY

STAN KONTAKTÓW PRZY KABINIE NA POZIOMIE „0"

CONTACT POSITION WITH CAR AT FLOOR 0

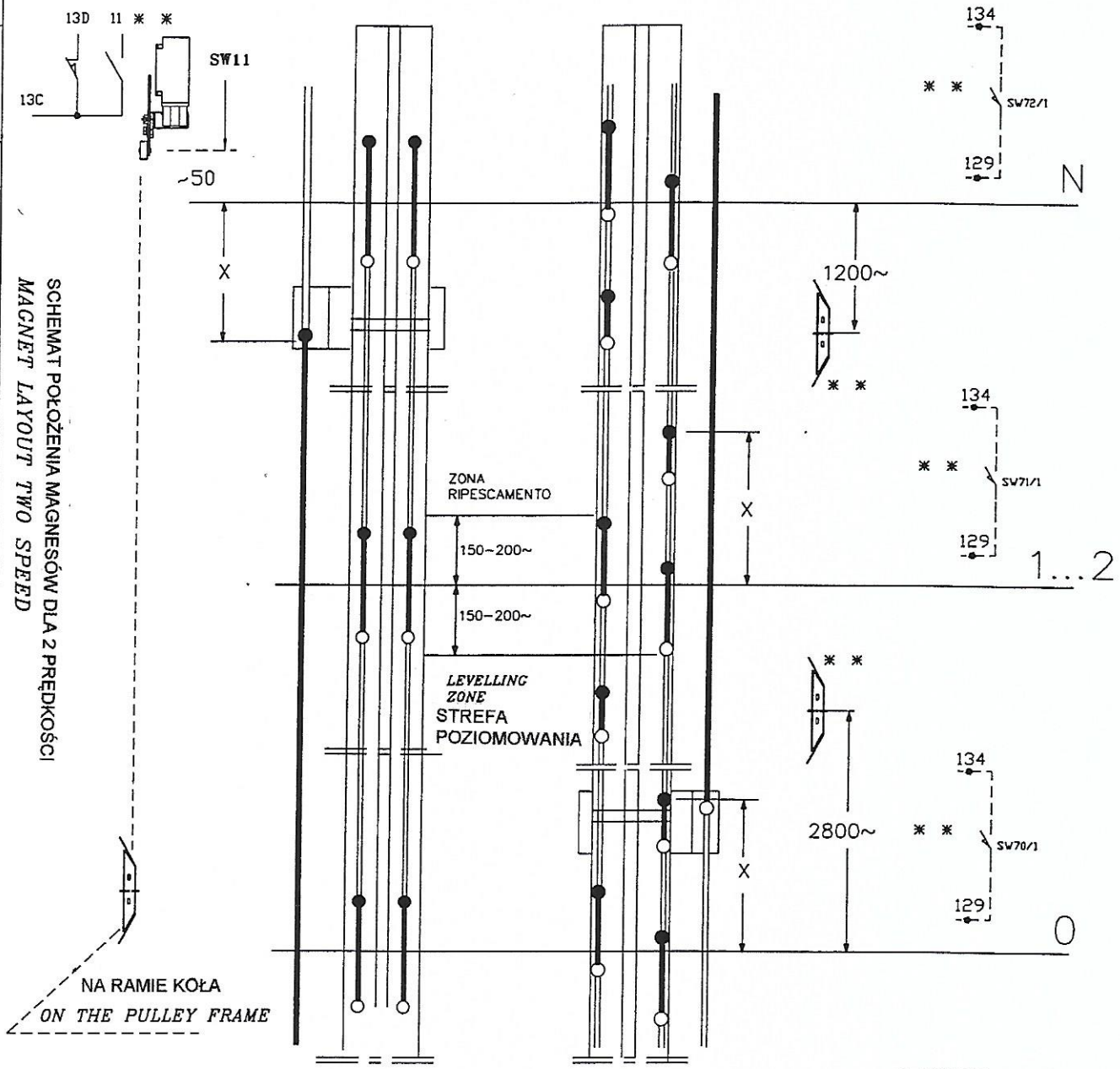

SCHEMAT POŁOŻENIA MAGNESÓW DLA 2 PRĘDKOŚCI

MAGNET LAYOUT TWO SPEED

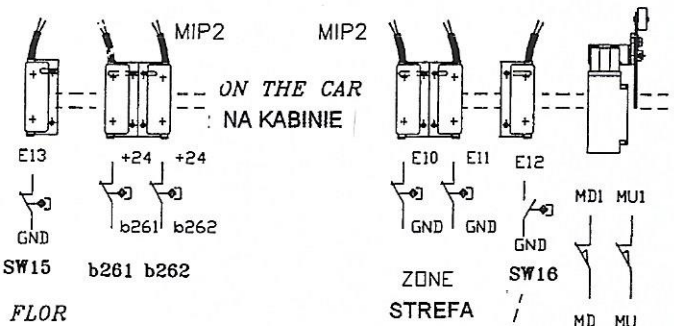

TRIANGULAR KEY
CONTROL SWITCH
WYŁĄCZNIK NA KLUCZ
TRÓJKĄTNY DLA PR EN81.21

* *
MONTAGGIO NEL VANO
ON THE SHAFT

SW11
WYŁĄCZNIK KRAŃCOWY *TOP FLOR*
OVERTRAVEL LIMIT GÓRNY PRZYSTANEK

LEVELLING CONTACTS
KONTAKTY POZIOMOWANIA

BOTTON FLOOR
DOLNY PRZYSTANEK

OGRANICZNIK KONSERWACYJNY
GÓRA/DÓŁ DLA PR EN81.21
UP/DOWNN MAINTENANCE LIMIT

Daldoss Elevetronic

DOCUMENT NUMBER: H0.1.IM8.03
REV. 1

CIRCUIT DIAGRAM: EASYLIFE 3~ GMV FERMATOR VVF
CORY 200

CHECK

DRAWN BY

DATE 01/09/00
N. MANOEUVRE

REPLACING DWG REV.

SHEET 7 OF 11

RESERVED PROPERTY REPRODUCTION EVEN PARTIAL IS NOT ALLOWED

KABEL ZWISOWY
TRAVELLING CABLE

N	CAVO 1	CAVO 2	CAVO 3	CAVO 4
1	50	MR	C00	GONG
2	51	MU	C01	E14
3	52	MD	C02	F09
4	13D	194	C03	80
5	14	261	C04	91
6	15	262	C05	98
7	16	GND	I00	+C
8	17	+24	I01	-C
9	137	E10	I02	1C
10	138	E11	I03	2C
11	R	E12	I04	9
12	N	E13	I05	--
13	--	F04	F06	--
14	125 **	F05	F07	--
15	126 **	F12 ***	E07	97
16	PE ⏚	PE ⏚	PE ⏚	PE ⏚

NEW REPORTER VCU

** PR EN81.21

*** : JEDYNIE DLA PODWÓJNYCH DRZWI
ONLY WITH DOUBLE DOORS

TERMINAL PANEL ŁĄCZENIOWY
SERVICE PANEL SERVIZIO

CAVO 1	50	PE ⏚	C00
	51		C01
	52		C02
	13D		C03
	14		C04
	15		C05
	16		I00
	17		I01
	137		I02
	138		I03
	R		I04
	N		I05
	--		F06
	125		F07
	126		E07
CAVO 2	14/1		GONG
	15/2		E14
	15/3		F09
	GND		80
	+24		91
	GND		98
	+24		+C
	MU1		-C
	MD1		1C
	E14/1		2C
CAVO 3	MR		9
	MU		--
	MD		--
	194		--
	261		97
	262		
	GND		
	+24		
	E10		
	E11		
	E12		
	E13		
	F04		
	F05		
	F12		

COLLEGAMENTI PER LA FASE DI INSTALLAZIONE

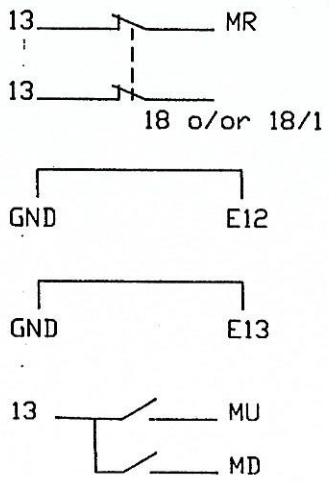

SCHEDA 204 PWR

PFR LEED ON = 3~

SCHEDA 200 CORY

TM - TM
SW06 = GND/E04

CONNECTIONS FOR INSTALLATION PROCEDURE
PROCEDURA INSTALACYJNA

(JAZDA MONTAŻOWA Z KASETY REWIZYJNEJ)

KASETA JAZDY REWIZYJNEJ MANUTENZIONE
MAINTENANCE BOX

13D	CZARNY	*BLACK*
14	BRĄZOWY	*BROWN*
MR	POMARAŃCZOWY	*ORANGE*
MU	CZERWONY	*RED*
MD	CZERWONY	*RED*
15	NIEBIESKI	*BLUE*
194	NIEBIESKI	*BLUE*
125 **	RÓŻOWY	*PINK*
126 **	RÓŻOWY	*PINK*

1	2	3	4	5	6	7	8	9	10	11	12	13	14	15	16
Daldoss Elevetronic				DOCUMENT NUMBER HO.1.IM8.03 REV. 1	CIRCUIT DIAGRAM EASYLIFE 3~ GMV FERMATOR VVF CORY 200					DRAWN BY BdLA CHECK		DATE 01/09/00 N. MANOEUVRE		REPLACING DWG REV.	SHEET 8 OF 11

RESERVED PROPERTY REPRODUCTION EVEN PARTIAL IS NOT ALLOWED

SCHEMA CITOFONO CON TELESOCCORSO REPORTER

INTERCOM BOARD WITH AUTOCALL EMERGENCY DEVICE REPORTER

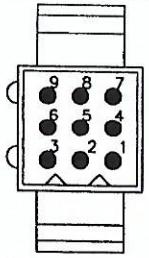

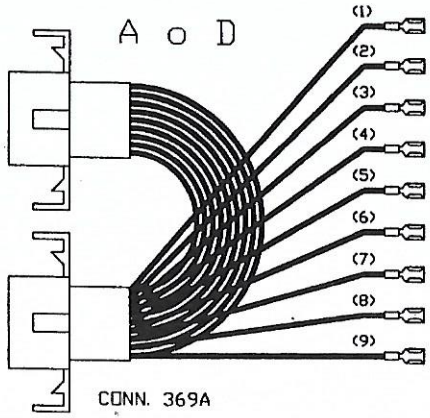

1 - LIGHT BLUE	JASNONIEBIESKI
2 - ORANGE	POMARAŃCZOWY
3 - BLACK	CZARNY
4 - BROWN	BRĄZOWY
5 - RED	CZERWONY
6- BLUE	NIEBIESKI
7 - GREEN	ZIELONY
8 - YELLOW	ŻÓŁTY
9 - GREY	SZARY

ZBIORCZOŚĆ W DÓŁ
DOWN COLLETIVE

CAVO A	UNIVERSALE *UNI* CAVO A	DISPLAY CAVO D
GND	LB	I00 (-2 -1 0 1)
+24	+24	I01 (-1 0 1 2)
U00	C00	I02 (0 1 2 3)
D01	C01	I03 (1 2 3 4)
D02	C02	I04 (2 3 4 5)
D03	C03	I05 (3 4 5 6)
D04	C04	F06
D05	C05	F07
--	LO	+24 (COM COM)

ON THE MACHINE ROOM
IN LOCALE MACCHINA

REPORTER 2000
+14V, GND, START, READY, GND, MICR., ALTOP., BATT. +, BATT. -, LINEA TEL 1, 2, 3

INTERCOM
CITOFONO
ON THE MACHINE ROOM
IN LOCALE MACCHINA

CORNETTA
RECEIVER

IN CAR
IN CABINA

C +C 1C 2C

ON THE CAR ROOF
SUL TETTO

* OPTION

CORNETTA
RECEIVER

INTERCOM
CITOFONO
IN PIT
IN FOSSA

* OPTION

CORNETTA
RECEIVER

bat+12
X2R
-C
9
X2R
2C
1C
+C

PRZYCISKI WEZWAŃ
LANDING CALL BUTTON

ZBIORCZOŚĆ W DÓŁ
DOWN COLLETIVE

CAVO A

U00 (3)
D01 (4)
D02 (5)
D03 (6)
D04 (7)
D05 (8)
- - (9)

DOWN. . . E- SW30 LP21

(1) GND

(2) +24

STEROWANIE PRZESTAWNE
SINGOL BUTTON

CAVO A

C00 (3)
C01 (4)
C02 (5)
C03 (6)
C04 (7)
C05 (8)
LO (9)

LO (9)

C. . . . E- SW30 LP7

(1) LB

(2) +24

1	2	3	4	5	6	7	8	9	10	11	12	13	14	15	16

Daldoss Elevetronic

DOCUMENT NUMBER HO.1.IM8.03
REV. 1.1

CIRCUIT DIAGRAM EASYLIFE 3~ GMV FERMATOR VVF
CORY 200

DRAWN BY
CHECK

DATE 22/07/02
REPLACING DWG REV. 1 - 01/09/00
SHEET 9
N. MANOEUVRE
OF 11

RESERVED PROPERTY REPRODUCTION EVEN PARTIAL IS NOT ALLOWED

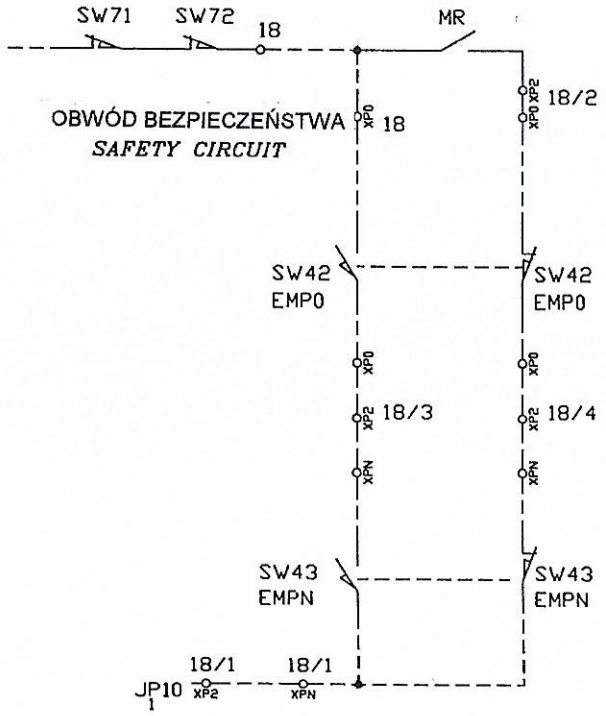

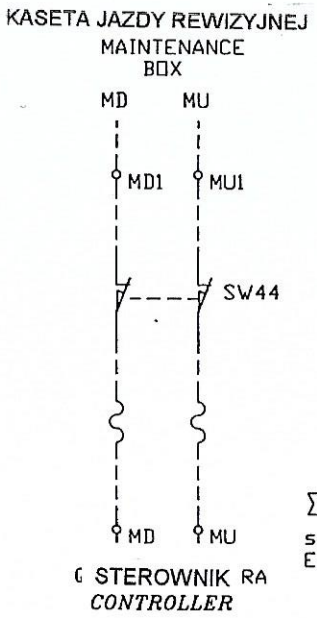

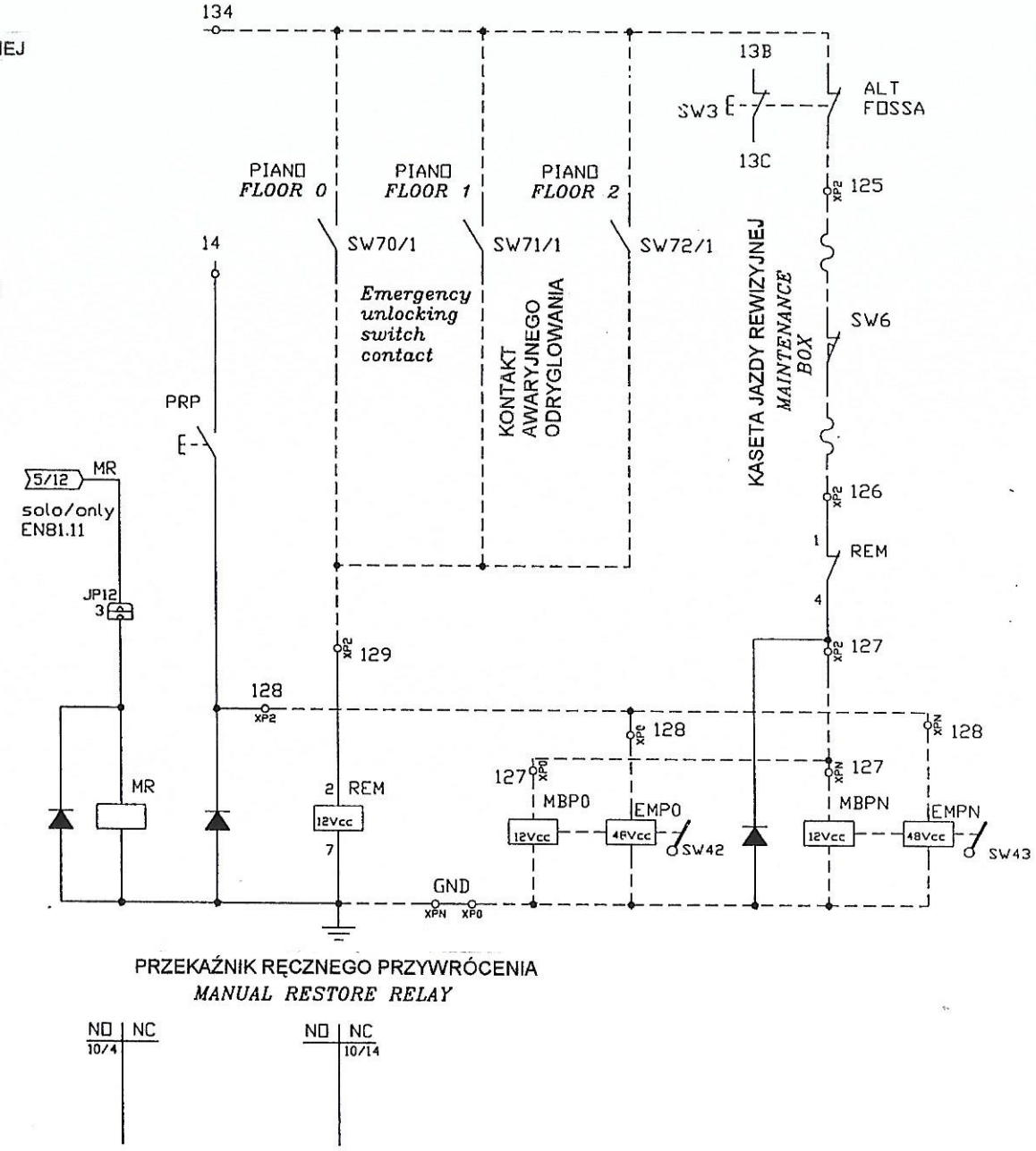

9/3	9/12	9/13	9/11	9/4	9/3	9/4
18	127	128	GND	18/2	18/3	18/4

Morsettiera : XP0
LISTWA: XP0

9/14	9/15	9/11	9/3	9/3	9/4
127	128	GND	18/1	18/3	18/4

Morsettiera : XPN
LISTWA: XPN

PRZEKAŹNIK RĘCZNEGO PRZYWRÓCENIA
MANUAL RESTORE RELAY

NO | NC
10/4

NO | NC
10/14

PROP FOR AUTOMATIC DOOR
PODPORA DLA DRZWI AUTOMATYCZNYCH PR EN81.21

1	2	3	4	5	6	7	8	9	10	11	12	13	14	15	16
Daldoss Elevetronic				DOCUMENT NUMBER H0.1.IM8.03 REV. 1	CIRCUIT DIAGRAM EASYLIFE 3~ GMV FERMATOR VVF CORY 200					DRAWN BY CHECK		DATE 01/09/00 N. MANOEUVRE		REPLACING DWG REV.	SHEET 10 OF 11

RESERVED PROPERTY REPRODUCTION EVEN PARTIAL IS NOT ALLOWED

6mmq.	6mmq.	6mmq.	6mmq.	6mmq.	6mmq.	6mmq.	6mmq.
2/2	2/2	2/2	2/2	3/1	3/2	3/2	2/2
N	R	S	T	U	V	W	⏚ PE

Morsettiera : X0
LISTWA: X0

1.5mmq.	1.5mmq.	1.5mmq.	1.5mmq.	1.5mmq.	1.5mmq.	1.5mmq.	1.5mmq.	1.5mmq.
10/14	10/14	10/14	10/10	10/10	10/2	10/4	10/3	10/4
125	126	127	128	129	18/1	18/2	18/3	18/4

Morsettiera : XP2 PIANTONI/PROP
LISTWA: XP2 PODPORA

4mmq.	4mmq.	4mmq.	4mmq.	4mmq.	4mmq.	4mmq.	4mmq.	4mmq.	4mmq.	4mmq.
2/1	2/2	2/2	2/1	2/2	2/14	2/14	2/14	2/14	3/5	3/5
50	50	51	51	52	+24	+24	GND	GND	GND	GND

Morsettiera : X1
LISTWA: X1

1.5mmq.	1.5mmq.
9/3	12/2
9	BAT+

Morsettiera : X2R REPORTER
LISTWA: X2R REPORTER

1.5mmq.	1.5mmq.	1.5mmq.	1.5mmq.	1.5mmq.	1.5mmq.	1.5mmq.	1.5mmq.	1.5mmq.	1.5mmq.	1.5mmq.	1.5mmq.	1.5mmq.
3/7	3/4	3/11	3/14	3/13	3/15	3/15	3/4	3/5	2/7	3/5	3/7	3/3
11	13	14	15	16	17	18	VD	VE	134	13C	13D	VML

Morsettiera : X2
LISTWA: X2

1	2	3	4	5	6	7	8	9	10	11	12	13	14	15	16

Daldoss Elevetronic

DOCUMENT NUMBER HO.1.IM8.03
REV. 1

CIRCUIT DIAGRAM EASYLIFE 3~ GMV FERMATOR VVF
CORY 200

DRAWN BY Bol A.
CHECK HB

DATE 01/09/00
REPLACING DWG REV.
SHEET 11
N. MANOEUVRE
OF 11

RESERVED PROPERTY REPRODUCTION EVEN PARTIAL IS NOT ALLOWED